LoRaWAN Rangefinder / Level Sensor

Ultrasonic non-contact distance measurement

Features

- LoRaWAN™-enabled non-contact distance sensor (rangefinder).
- Range: 5 m / 10 m; resolution: 1 mm.
- Place and measure: no setup required.
- Configurable via command line interface and downlink command interface.
- Unattended real-time monitoring for several years without replacing batteries.
- Robust polycarbonate enclosure: weatherproof, impact-, UV-resistant (IP67).
- Standard alkaline (C-type) batteries: available everywhere.
- CE compliant, Radio Equipment Directive (RED) 2014/53/EU.

Applications

- Outdoor remote monitoring.
- Water level monitoring in running water.
- Flood monitoring.
- Waste water management, sewer system monitoring.
- Level / depth monitoring in water tanks.
- Snow level monitoring.
- Presence detection: car parking monitor.
- Waste management / smart bin: monitor waste bins and recycling containers.
- Smart agriculture: fill level monitoring in grain, fertilizer or pellets silos.
- Irrigation ponds monitoring.

decentLab

Decentlab GmbH
Ueberlandstrasse 129 – 8600 Duebendorf – Switzerland
Tel. +41 44 809 3595 – mail@decentlab.com – www.decentlab.com

Description

The device DL-MBX enables remote monitoring of water level, fill level of tanks and silos, fill level of waste containers, presence of objects or snow level. It measures the distance between the sensor head and the target (rangefinder). The measurement principle is based on ultrasonic waves which are transmitted by the sensor and reflected back from nearby objects. Using the time of flight of the sound waves and the speed of sound (temperature compensated), the sensor computes the traveling distance and thus the distance to the object.

For each measurement, the device collects 15 distance readings (samples). Of these 15 samples, it discards all invalid samples and computes the most reliable value (median), which is transmitted as “distance” value in mm. In addition, the “number of valid samples” is also transmitted. These values allow to estimate the quality of a measurement. Some example data and their respective interpretation:

Distance [mm]	Valid samples	Interpretation
1234	15	d = 1234 mm; optimal measurement
1234	10	d = 1234 mm; good measurement
1234	5	d = 1234 mm; data okay, but detecting the target was challenging
10000	0	No target detected / out of range (10 m range)
5000	0	No target detected / out of range (5 m range)
500	0	No target detected / out of range / too close
300	0	No target detected / out of range / too close

The device can be placed in a safe distance from the object. This is very convenient for measuring e.g. (waste) water level. The measurement range is 5 m or 10 m with a resolution of 1 mm.

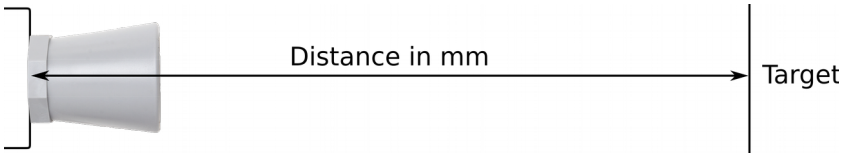

Sensor data are transmitted in real-time using LoRaWAN™ radio technology. LoRaWAN™ enables encrypted radio transmissions over long distances while consuming very little power. The user can obtain sensor data through Decentlab’s data storage and visualization system, or through the user's own infrastructure. Visit http://www.decentlab.com/ for more information about Decentlab's data cloud service.

Device variants

Name	Range	Target detection	Application
DL-MBX-001	10 m	First detectable target	General purpose
DL-MBX-002	5 m	Largest detectable target	Tank level, sewer system
DL-MBX-003	5 m	First detectable target (snow)	Snow level

© Decentlab GmbH 2018
Specifications in this document are subject to change without notice.

Device specifications

Device logging function

Sampling interval	10 min (configurable through the user interfaces)
Data upload interval	10 min (configurable through the user interfaces)
Transmitted sensor data	Distance (in mm) Number of valid samples (indicates quality of measurement) Device battery voltage (in mV)
SD-card logging	Optional

Distance sensor specifications

Operating principle	Ultrasonic time of flight measurement
Measurement range	DL-MBX-001: 0.5 m to 10 m DL-MBX-002: 0.3 m to 5 m DL-MBX-003: 0.5 m to 5 m
Resolution	1 mm
Precision / repeatability	1 mm @ 1 m (typical)
Accuracy	1% or better (factory calibrated)

Radio / wireless

Wireless technology	LoRaWAN™
Wireless security	AES-128 data encryption
LoRaWAN device type	Class A end-device
Supported LoRaWAN features	OTAA, ABP, ADR, adaptive channel setup
Wireless range	> 10 km (line of sight), approx. 2 km (suburban)[1]
RF transmit power	14 dBm (25 mW)
Effective radiated power	11.9 dBm [2]
Receiver sensitivity	−146 dBm [3]
Frequency bands	868 MHz (EU version), 915 MHz (US version)[4]
Antenna	Integrated omnidirectional antenna featuring a near-perfect radiation pattern[2]

1 Decentlab reports successful transmissions over 56 km distance
2 See Appendix A: Antenna performance measurement
3 Specified by radio chip vendor
4 Contact us for region specific options

© Decentlab GmbH 2018
Specifications in this document are subject to change without notice.

Device power supply	
Internal battery type	2 × alkaline C batteries (R14)
Power consumption (average)	≤ 0.6 mW (10 min interval)
Battery lifetime estimation[5]	6.5 years (10 min interval, SF7) 3.5 years (10 min interval, SF12) 12.5 years (60 min interval, SF7) 10.5 years (60 min interval, SF12)

Operating conditions	
Temperature	−20 to 50 °C
Humidity	0 to 100 % RH

Mechanical specifications	
Dimensions	170 × 81 × 70 mm
Weight	448 g including batteries (316 g without batteries)
Enclosure	Polycarbonate; weatherproof, impact-, UV-resistant (IP66/IP67). Pressure equalizer plug with PTFE membrane (IP68). Sensor: IP67 rating.

5 Including alkaline battery self-discharge of 3.6 % per year (conservative estimation); battery capacity: 20000 mWh.

© Decentlab GmbH 2018
Specifications in this document are subject to change without notice.

Operating instructions

The product usually requires no user interaction. If you open the enclosure, e.g. in order to replace the batteries, unscrew the four plastic screws and carefully open the lid.

CAUTION: Make sure the sensor unit does not drop out of the enclosure while opening! Do not touch the electronic components and sensors!

NOTE: When closing the lid, make sure the lid is fitted the right way, so that the enclosure is properly sealed: A little nose in the enclosure fits a notch in the lid and vice versa.

Replacing batteries

Insert 2 high-quality alkaline C batteries (R14) into the battery holder on the back side of the sensor unit. The device operates until the battery voltage drops to 2.0 V. Always replace both battery cells with two identical fresh batteries.

User button and LEDs

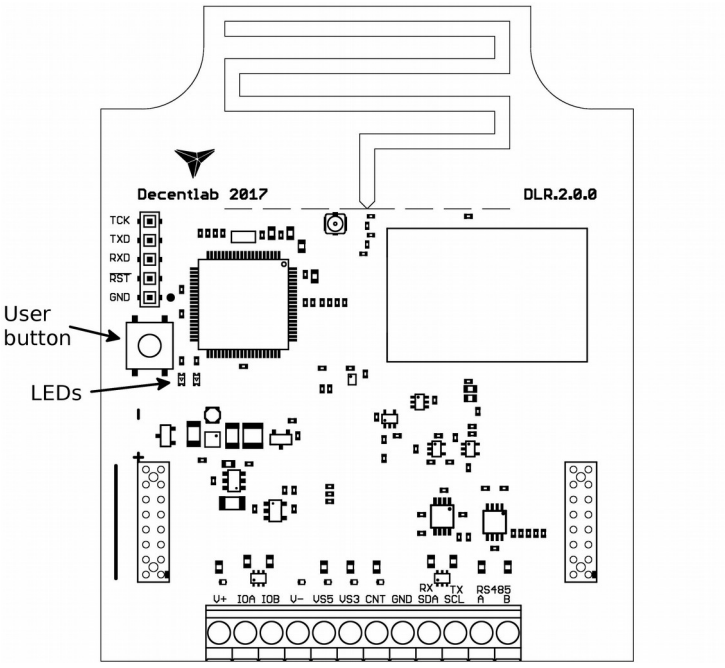

Illustration 1: Sensor unit (top side) showing the user button and the LEDs.

© Decentlab GmbH 2018
Specifications in this document are subject to change without notice.

Operating modes

The device has three operating modes:

- Reset: System (re-)start; both LEDs light up for a short time.
- Active mode: Periodic measurements and data transmissions; green LED flashes for each measurement.
- Test mode: Measurements and data transmissions at fastest possible rates; blue LED is on. NOTE: Use only momentarily, e.g. for testing the wireless connection. The device will switch automatically to active mode after 20 min.
- Sleep mode: No measurements and data transmissions (power save mode, for shelf storage).

Switching between operating modes

The user button allows to switch between the operating modes as shown in Illustration 2. To perform a device reset, switch to sleep mode first (if necessary) by pushing the button for 3 seconds (until LEDs flash three times); wait 3 seconds; then push the button for 3 seconds (until LEDs light up). To switch between active and test mode, push the button for 1 second (blue LED on / off). If the blue LED is off, the device is in active or sleep mode. If the blue LED is on, the device is in test mode. To check whether the device is active or in sleep mode, push the button twice for 1 second; if the blue LED goes on and off, the device is in active mode; otherwise, the device is in sleep mode.

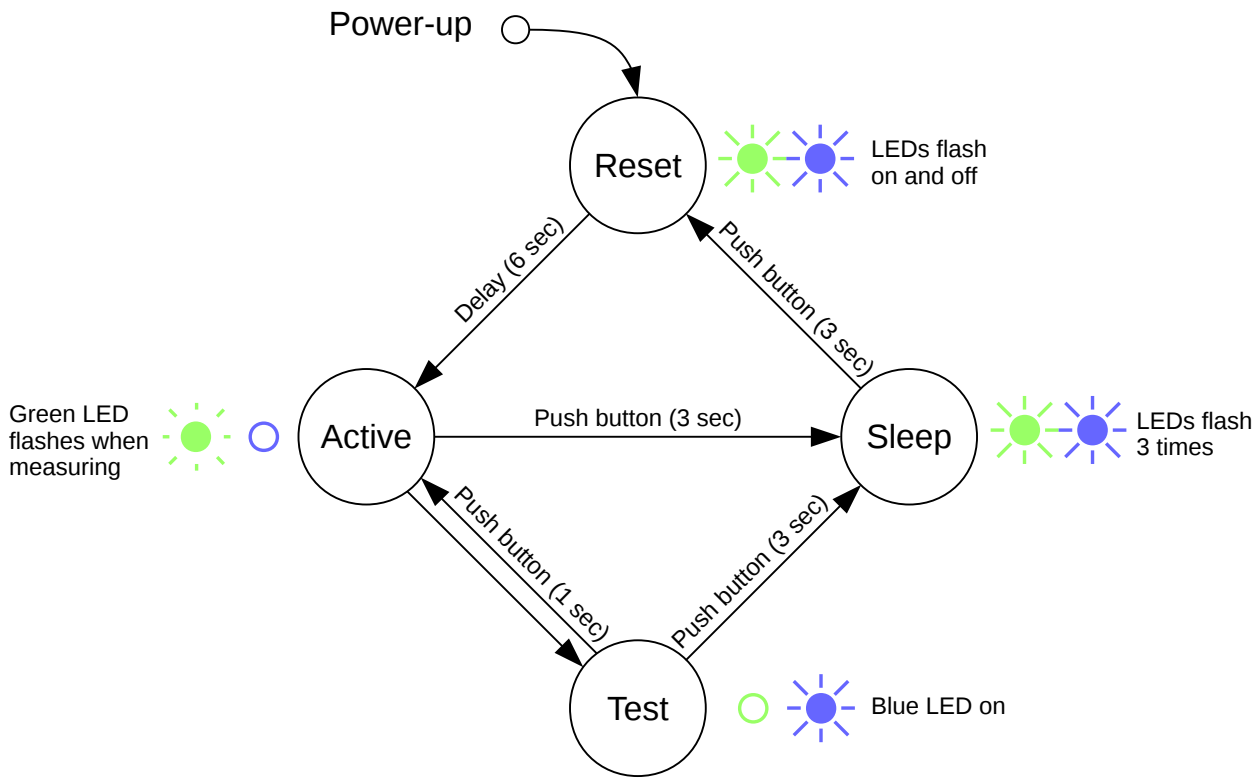

Illustration 2: Device operating mode state diagram.

© Decentlab GmbH 2018
Specifications in this document are subject to change without notice.

Measurement cycle (active mode)

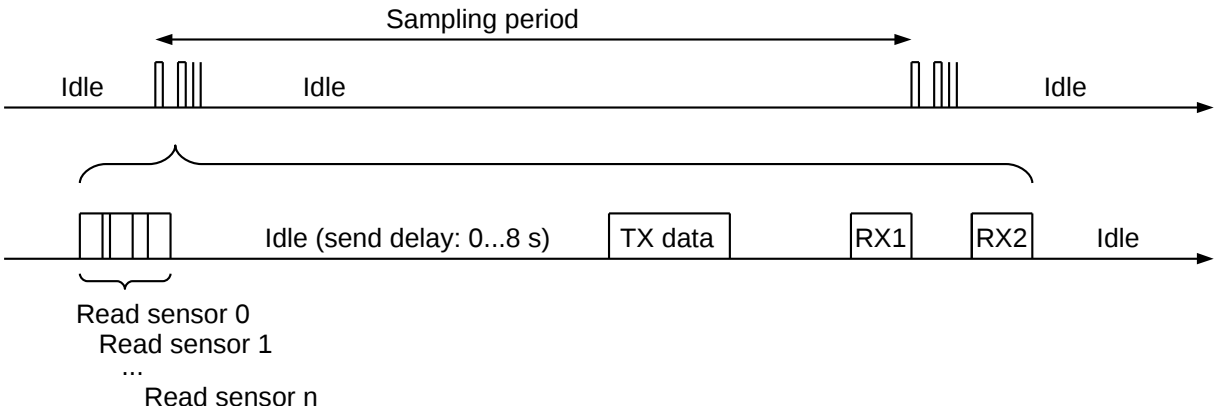

Illustration 3: Device activity during the active mode.

During the active mode, the device periodically reads the sensors (see Illustration 3). After a random delay of 0...8 seconds, the device transmits the sensor data. If the device has not yet joined the LoRaWAN network, it will try to join until it succeeds (maximum 3 attempts per sampling period). Afterwards, it will transmit the data (TX data). Following the data transmission, two receive slots are opened (RX1 and RX2). During these time slots, the device is ready to receive data from the network (downlink messages) as defined in the LoRaWAN™ specification.

As shown in Illustration 3, the device is idle most of the time. During the idle time, the current consumption is extremely low.

LED signaling (active mode)

- Read sensors: green LED flashes once.
- Data sent successfully: green LED flashes 2 times.
- Data could not be sent: green LED flashes 4 times.

Device configuration

The user can configure a rich set of device parameters, such as sampling interval, LoRaWAN data rate, ADR settings and many more. If desired, the parameter settings can be stored permanently in the internal non-volatile memory. The user can configure the device via two interfaces:

- Command line interface: via a serial cable (UART – USB) connected to a computer.
- Downlink command interface: over the air using LoRaWAN downlink messages.

For a full description of the command line interface and the downlink command interface, please find the specific documents on https://www.decentlab.com/support.

© Decentlab GmbH 2018
Specifications in this document are subject to change without notice.

Mounting instructions

Mount the device with the ultrasonic sensor (horn) facing toward the target.

The sensor's greatest sensitivity is in the center of the measurement beam (a diffuse cone of ultrasonic waves). However, objects outside the cone can also cause reflections of the sound waves and thus interfere with the measurement. Especially objects with sharp corners and objects closer than the target can cause strong reflections which might drown the reflections of the target. Therefore, some recommendations for positioning the device:

- Make sure that the target is in the center of the measurement beam.
- Try to keep any interfering objects away from the measurement beam.
- Avoid objects which could cause interference, e.g. objects with sharp corners.
- Mount the device on a cantilever to stay away from mounting poles, walls or tubes.
- Schedule some time for finding the best position by experiments.

Prefer a mounting location which is protected against rain and direct sun radiation.

For best radio performance, position the device in such a way that the device lid faces roughly in the direction of the next gateway. Avoid metallic objects close to the device.

The housing includes 4 threaded bushes (M4) in a 90 × 60 mm rectangle (see Illustration 4). This enables easy installation using standard M4 bolts.

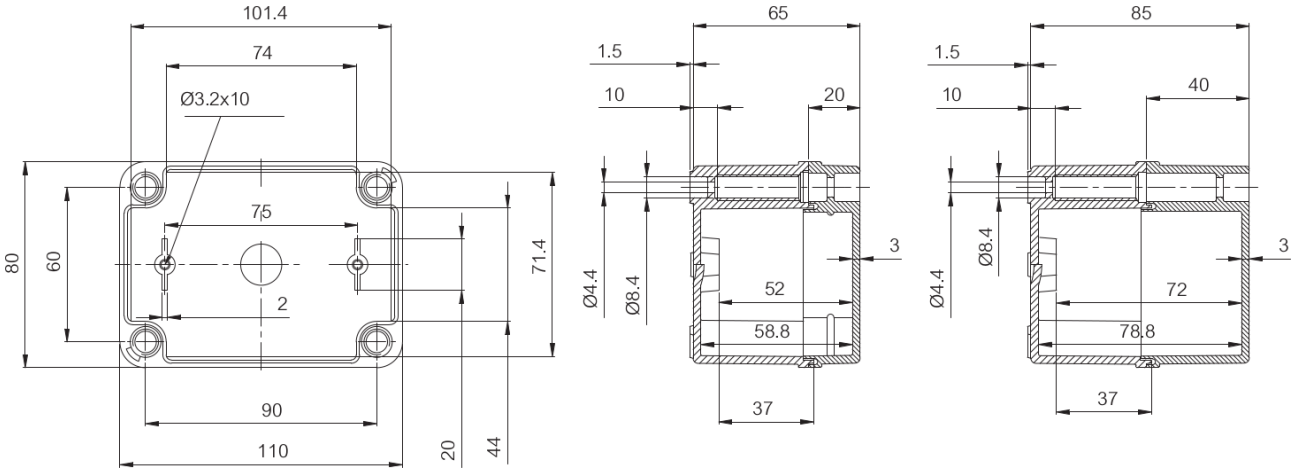

Illustration 4: Housing dimensions (in mm). Note: Drawing not including the ultrasonic sensor.

© Decentlab GmbH 2018
Specifications in this document are subject to change without notice.

Ordering information

Device model references

DL-MBX-001-EU868	General purpose, 10 m, EU version
DL-MBX-002-EU868	Tank level, 5 m, EU version
DL-MBX-003-EU868	Snow level, 5 m, EU version
DL-MBX-001-US915	General purpose, 10 m, US version
DL-MBX-002-US915	Tank level, 5 m, US version
DL-MBX-003-US915	Snow level, 5 m, US version
	Other options: contact us

© Decentlab GmbH 2018
Specifications in this document are subject to change without notice.

Declaration of conformity

We,

Decentlab GmbH
Ueberlandstrasse 129
8600 Duebendorf
Switzerland,

declare under our own responsibility that the product

Reference	Name
DL-MBX-xxx-EU868	**Decentlab LoRaWAN rangefinder / level sensor**

to which this declaration refers conforms with the relevant standards or other standards documents

- EN 300 220-1 V3.1.1: 2017-02
- EN 300 220-2 V3.1.1: 2017-02
- EN 301 489-1 V2.2.0: 2017-03
- EN 301 489-3 V2.1.1: 2017-03

According to

- Radio Equipment Directive (RED) 2014/53/EU
- Electromagnetic Compatibility (EMC) Directive 2014/30/EU

Duebendorf, 12. September 2018 Reinhard Bischoff, Managing Director

© Decentlab GmbH 2018
Specifications in this document are subject to change without notice.

Sensor data message format

Message:	Header	Sensor 0 data (optional)	Sensor 1 data (opt.)	...	Sensor 15 data (opt.)

- Message length is variable, depending on which sensor data are included. Minimum length is 5 bytes (header only). Maximum length is 5 bytes + all sensor data (see below).
- Integers are big endian: MSB first byte, LSB last byte.

Header:	Version	Device ID	Flags

- Version: 1 byte; version = 2 for current protocol version.
- Device ID: 2 bytes; 0...65535.
- Flags: 16 bits: flag 15 | flag 14 | … | flag 0 (LSB).
- The flags indicate, if data of the respective sensors are included in the message or not: flag n == 1: sensor n data included; flag n == 0: not included.

Decoder software

For message decoder software, please go to https://www.decentlab.com/support, where you find code examples in JavaScript and other programming languages.

Details

Field	Parameter name	Type	Conversion	Unit
Header	Version	uint8		
Header	Device ID	uint16		
Header	Flags	uint16		
Sensor 0	Distance	uint16	x	mm
Sensor 0	Number of valid samples	uint16	x	
Sensor 1	Battery voltage	uint16	x / 1000	V

Example 1 (all sensor data included)

```
Message (hex):
02012f000304d200010bb1

02     Version              =                  2
012f   Device ID            =                303
0003   Flags                =  0b0000000000000011
04d2   Distance             =               1234  mm
0001   Valid samples        =                  1
0bb1   Battery voltage      =              2.993  V
```

© Decentlab GmbH 2018
Specifications in this document are subject to change without notice.

Example 2 (only battery voltage)

```
Message (hex):
02012f00020bb1

02     Version              =                  2
012f   Device ID            =                303
0002   Flags                =  0b0000000000000010
----   Distance             =               ----  mm
----   Valid samples        =               ----
0bb1   Battery voltage      =              2.993  V
```

© Decentlab GmbH 2018
Specifications in this document are subject to change without notice.

Appendix A: Antenna performance measurement

No : *DE.17.039.F01* Page 21 / 24

Measurement Results:

EUT	DLR1-LP8		
Test performed	Effective radiated power (ERP)		
Verdict, Test	Pass		
Modification	None		
Mode of operation	Transmitter mode		
Test date, time	13.06.2018 09:37:06		
Antenna height	1.30 m	**Antenna polarization**	Vertical
EUT position	0 to 360 Degree	**Antenna distance**	3 m
Measurement settings	Radimation Version: 2017.1.6, RBW: 1 kHz, VBW: 300 kHz, Sweep time: Auto [120 ms], Step freq: Linear: 250 Hz steps, Attenuator: Auto [10 dB], Internal preamp: 20 dB, Measure time: 10 ms, Measurement equipment: TP_RE_30M-1G_ETSI_Ver		

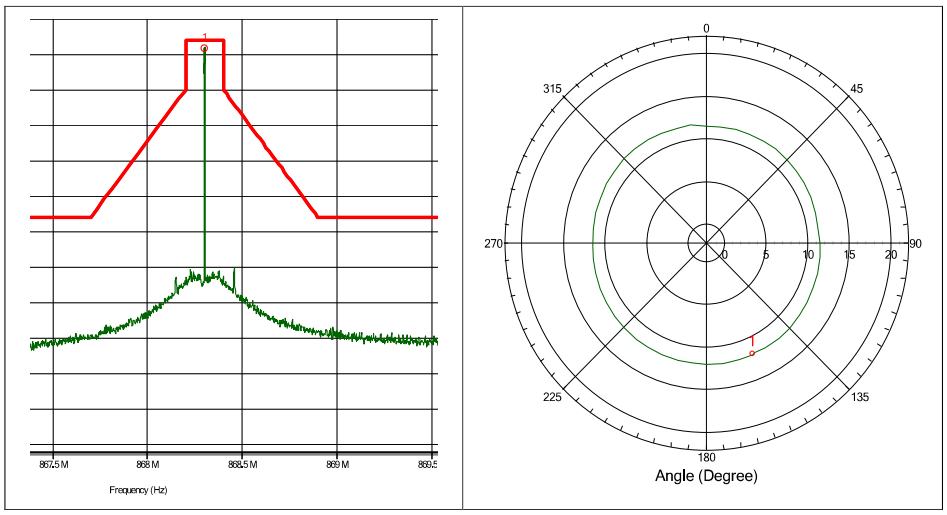

Detected peaks

Peak Number	Frequency	Peak	Peak Difference	Status	Angle	Height	Polarization
1	868.302 MHz	11.9 dBm	-2.14 dB	Pass	157 Degree	1.3 m	Vertical

Limits:

ETSI EN 300 220-2, Table C.1 OFB: 863 MHz to 870 MHz <= 0.1% duty cycle or polite spectrum access	**25 mW e.r.p** (14 dBm)

EMV Prüfstelle Zürich – Technopark – 8005 Zurich

© Decentlab GmbH 2018
Specifications in this document are subject to change without notice.