AUGMENTING BACnet WITH LoRaWAN® WIRELESS IOT

OCTOBER 2021

Building automation and control (BAC) systems can manage everything in the built environment from light and temperature to air and water to security and servicing. Yet traditional hard-wired BAC systems are costly to install, challenging to extend, and inflexible when it comes to adding new functions that match evolving building use. Is there a better way to manage functional spaces?

- Users and owners of built spaces now demand a higher level of control, with richer data and improved BAC efficiency.
- As BAC systems are upgraded, cost and system flexibility are key concerns.
- A new generation of low-power wide-area networking technologies offer a light touch total solution to the BAC challenge.

Although the built environment is constantly changing, most people never give a second thought to how the spaces where they live and work are managed. However, people do know they want sustainability and more automated control. Fortunately, new generation technology is keeping pace with human demands, creating innovations that link communication technologies and distributed internet devices in an intelligent network of building controls.

Previously, creating a high level of control with BAC systems meant high installation and maintenance costs for systems that were inherently inflexible because they were based upon highly evolved protocols. Now, the cost-benefit equation is shifting: we can do much more for much less, thanks to the technology of small devices.

Battery operated sensors small enough to fit in the palm of your hand, with long-range low-power wireless communication capabilities, are eliminating the need to accept the limits of hard-wired infrastructure. This means that monitoring and controlling conventional building environments can be both more cost-effective and more accessible. The next step is to combine this flexibility with the capabilities of intelligent cloud-based machines to bring analytical and learning ability to the management of built spaces.

This is where Low Power Wide Area Networks, or LPWAN, come into play. Despite the forbidding sound of the technology, the principle is simple: use long range wireless communications to connect low-power consumption IoT (Internet of Things) sensors/actuators. Existing building control and management systems use complex and highly evolved protocols to manage the machines and human services that keep buildings liveable and productive. The freely available open standard, called LoRaWAN®, operates in the unlicensed radio frequency spectrum and is changing the game regarding how we think about the placement of sensors and what those devices can measure. LoRaWAN expands the possibilities of sensing and control devices whether inside or outside buildings and manages to do this without demanding new fixed power or communications infrastructures.

LoRaWAN IS THE SOLUTION FOR CONTROL

Using an unlicensed radio spectrum, LoRaWAN networks consist of IoT devices such as sensors and actuators that communicate bi-directionally. The network may consist of many hundreds or thousands of devices and may use a local or cloud-based server that manages the network. A single LoRaWAN gateway can cover 10's of thousands of square feet, eliminating the need for deployment of multiple access points or mesh points common in other wireless networking options. Power consumption is exceptionally low, allowing battery powered devices to operate for up to ten years without service.

BEFORE LoRaWAN THERE WAS BACnet

Although LoRaWAN is already implemented in many settings, from bricks-and-mortar buildings to whole cities, farms, wildlife parks and satellites, most building automation professionals are not familiar with how LoRaWAN would operate in a traditional BACnet environment. BACnet stands for Building Automation and Control Network, and BACnet is the most widely used standard for automation of built spaces and their environments. In most cases, LoRaWAN is not a replacement for BACnet, or an alternative to it – it is an enabling extension of its capabilities.

Primarily a package of protocols for hard-wired communication, BACnet specifies what kind of entities can be enabled in a digitized building management system– what kind of inputs and outputs the system will accept, how the system will be networked, what kind of data will be generated and how it will be stored, as well as specifics like protocols for managing HVAC, and machines like elevators, lifts, fire safety and lighting systems.

In most implementations, BACnet is hard-wired into the building infrastructure. The cost to build is relatively high, and flexibility is relatively low. Extending a BACnet build on its own terms means building more of the same. And, as the rate of change in the built environment has sped up, the costs and limitations of BACnet have become a constraint. This is an excellent opportunity to leverage applications that utilize an entirely new generation of long range, battery powered, wireless sensors.

Imagine a real-world organization, a company or institution that is busy extending or reshaping its operating spaces. There is nothing exceptional about that, because in a world that is changing almost out of recognition by the Covid-19 crisis, this is what organizations everywhere are doing.

Office space, labs and factories redesigned and repurposed for entirely new ways of working. Meeting rooms, libraries, hospitals and galleries have remodelled if not entirely reconfigured. Some spaces closed, but many more extended or created afresh, sometimes on very tight deadlines. In every case, the call has been for building management and control systems that are flexible enough to meet this sudden acceleration of change.

Legacy control systems were built assuming a world of incremental change and stable patterns of use. The need now is for a new layer of building control technology that can extend the functionality offered by BACnet, and do it with the flexibility and cost-effectiveness demanded by fast structural change.

ENTER LoRaWAN TECHNOLOGY

There is now a new generation of sensors and control devices that operate outside of the rigid grid-powered networks deployed in the past. Compared to BACnet devices and infrastructures they are small, flexible and cheap – and they represent an opportunity to move control of the built environment to the next level.

This is the world of LoRaWAN devices – battery-powered networking devices with power consumption so low that a single power pack can last for years. These devices can be deployed in buildings of all kinds without the need for a physical wired communications underlay to gather or distribute data. Remotely updateable and easily movable, they no longer are dependent on physical, fixed wired infrastructure. Communication through dense walls, elevator shafts or basements is outstanding, meaning that the number of LoRaWAN gateways, or access points, is an order of magnitude lower than Wi-Fi and requires no mesh points such as other wireless technologies like Zigbee. Coverage of tens of thousands of square feet is possible with a single LoRaWAN gateway.

There are two elements, or layers, to the way these devices communicate. The long-range technology element or 'lower' layer is a low frequency radio protocol, called LoRa, that allows communication over long distances and in very 'noisy' radio environments where other devices would struggle with interference. The 'upper' layer is the openly specified LoRaWAN communication protocol, which manages the power load as well as how the system networks and what frequencies it uses. Like a cordless phone or garage door remote, these devices do not require any license to deploy and operate.

LoRaWAN is not a replacement, but an augmentation to the BACnet environment. It can integrate into that environment in several different ways thus freeing the building manager to collect data from sources never dreamed possible even a few years ago.

PUTTING LoRaWAN TO WORK

New technologies have to live with legacy systems. We saw that many organizations have BACnet control systems up and running, with hardware built around the BACnet technology. The question then is how best to use the flexibility and rapid build-out potential of LoRaWAN in the context of an existing installation.

A typical company may want to use many of the specific capabilities of the LoRaWAN technology – like the ability to manage changing patterns of room or desk occupancy, or direct interaction with building users – and add this value to an existing BACnet system. And, in the wake of the Covid-19 pandemic, organizations are under intense pressure to make their buildings smarter and to manage the impact of building use on health and wellbeing, as well as to be a lot more flexible about working space provision. LoRaWAN opens up pathways to achieve that – but in most cases that means working with the buildings control legacy rather than attempting to replace it.

Experience has shown that there are several ways forward when it comes to combining LoRaWAN flexibility to a BACnet infrastructure. And three of these have already been deployed.

The first option is the backhaul option, and it focuses on the way data are channelled. Also known as 'BACnet over LoRaWAN', it makes LoRaWAN the communications link to whatever control applications are needed. It requires no change related to the BACnet protocol, network or BACnet enabled devices and management systems.

The second route is the complementary network option, focusing on integration at the Building Management System (BMS). The readout from IoT devices is presented to the BMS via an API, so that LoRaWAN data and sensors still appear to be part of the legacy BACnet system.

And there is a third option, which focuses on analytics. Instead of integrating LoRaWAN and BACnet at the buildings and control level, the data streams from both technologies are kept separate until they reach the stage of the analytics engine.

Case Study: Wattsense/Setemi

LoRaWAN IS COST-EFFECTIVE FOR ANY BUILDING SIZE

A large majority of small and medium-sized buildings (less than 5,000 m²) are not equipped with Building Management Systems due to the high cost of installing technically complex systems. This is a problem that LoRaWAN implementations can solve.

The French facility management company Setemi needed to install a BMS in a mid-sized 190-unit condominium, and turned to the French communications and controls specialist Wattsense for a solution that could handle multiple device control protocols, including LoRaWAN. The aim was to connect BMS equipment to the Setemi web-based energy management platform, while minimising site visits by technical staff.

Wattsense installed its own remotely controlled IoT box to capture data from pumps, boilers, heating regulators and a gas meter fitted with a LoRaWAN device, which in turn are controlled by the Setemi energy management system. The installation was up and running in less than a day, giving remote access to the gas meter and the heating regulator's parameters, and the capability to control all the BMS devices remotely.

This solution is interoperable with multiple devices and protocols, quick and cost-effective to deploy, and cheap to maintain over time. That means full-featured management systems are now within reach for smaller buildings.

+ CHOOSE BACKHAUL: LEVERAGE EXISTING INFRASTRUCTURE

The backhaul option can be implemented in two ways. The advantage of this approach is that it uses standard BACnet sensors and actuators without any modification other than a compatible modem while adding the ability to connect them wirelessly over long ranges.

In one scenario, existing BACnet devices are enabled with the ability to communicate via LoRaWAN using BACnet over IP. Some firmware, called Static Context Header Compression and Fragmentation (SCHC), can be added directly to the BACnet device or a small external bridging device can be placed next to the BACnet sensor/ actuator to perform this function.

Alternatively, LoRaWAN bridging via SCHC can be added to a BACnet/IP router rather than to individual BACnet devices.

A single BACnet router will manage data from a subset of BACnet sensors and actuators, perhaps in a remote part of the buildings network, and communicate with the buildings management system over LoRaWAN. All elements in the network continue to appear as native BACnet devices, but the infrastructure costs of adding such a subset are greatly reduced.

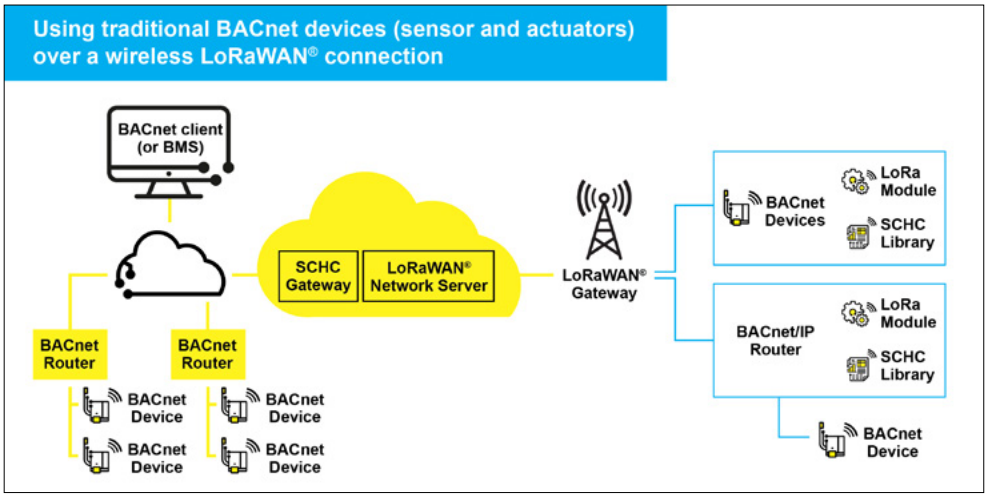

Case Study: Acklio

SEAMLESS BACnet COMMUNICATION OVER LoRaWAN

The French network technology developer Acklio offers a new approach to implementing a LoRaWAN backhaul in building management systems. The key lies in how data are managed.

The great difference between BACnet and LoRaWAN communication protocols is that BACnet uses internet-like data-hungry protocols that can send rich communications but demand considerable bandwidth, while LoRaWAN is optimized for power and range efficiency using very small packets of data. The challenge is how to combine these functionalities.

Acklio believes that the solution is a technology called SCHC (Static Context Header Compression), which compresses and if necessary fragments the header content of messages, making it possible to use an IP communication protocol over LoRaWAN. The Internet Engineering Task Force has just published a new set of standards that codifies how SCHC adapts existing IP-based protocols to LPWAN networks, guaranteeing interoperability of multiple technologies including LoRaWAN.

“This means we can now roll out energy efficient BACnet/IP over LoRaWAN all the way from the BACnet System to the BACnet Devices”, says Alexander Pelov, CEO of Acklio.

“We can either retrofit BACnet devices to connect via LoRaWAN to the building automation system, or we can retrofit a BACnet/IP router to connect a subset of BACnet devices to the building automation system via LoRaWAN. Either way, we can connect new sensors and controls inside and outside of buildings, and in remote areas.”

The benefits are seamless integration with the building automation system, with no impact of the BACnet application environment, while users are freed from ‘vendor lock-in’ associated with customized network protocols.

+ COMPLEMENTARY NETWORK: CREATE VIRTUAL BACnet DEVICES

In a complementary network, an independent LoRaWAN network is introduced whether in a new-build or on top of an existing system of BACnet devices. The LoRaWAN network of devices communicates on its own set of protocols and connects to the building management system through a dedicated server that makes any device in the LoRaWAN network appear to be a BACnet device sending BACnet messages. The LoRaWAN server can be hosted in the cloud, or on-premises if security demands.

Any LoRaWAN device can be added at will, including in locations where line-powered native BACnet devices would be too impractical or too costly. Yet no retrofitting of the buildings management system is needed – all the system sees is an additional set of BACnet devices that just happen to be virtual, thanks to LoRaWAN.

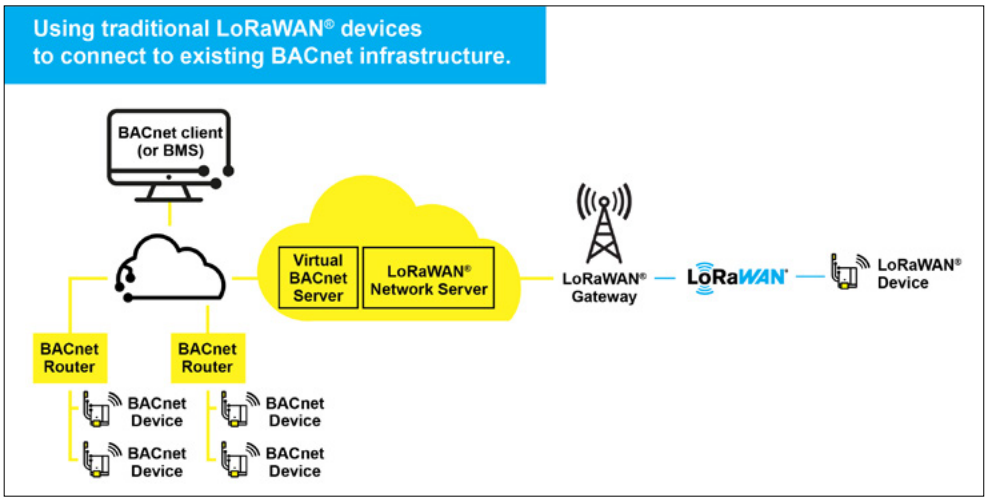

Case Study: Voytech

VOYTECH'S INTEGRATION PATHWAY

The UK control and monitoring specialist Voytech says that integration of LoRaWAN within a Buildings Management System (BMS) is a robust route to expanding the data available to the system without incurring excessive installation costs.

The challenge any BMS project will face is how to extend the capabilities of the system using an inherently flexible wireless application like LoRaWAN, and continue to leverage the capabilities of the installed environment of BMS devices, which mostly support the BACnet protocol. A conversion gateway between the LoRaWAN and BACnet environments may be necessary, but as Dr. Richard Fargus of Voytech Systems argues, "BACnet is actually ideal for integration with LoRaWAN as it allows low level integration of individual data values such as binary statuses, temperatures and setpoints."

Voytech has recently demonstrated an integrated BMS/LoRaWAN solution for central Heating, Ventilation & Air Conditioning (HVAC) control using a conventional BMS and a distributed heating system consisting of 60 control valves. The Voytech Sitelink Controller allows demand and temperature information to be transmitted to the BMS, and allows BMS control commands to be sent to the LoRaWAN devices.

Dr. Fargas says that this integration option is attractive because it is best implemented as an on-site solution, and is cost-effective as long as the LoRaWAN devices are correctly pre-configured for easy installation.

"The installation can be installed and commissioned by non-specialist electrical and controls contractors," says Dr. Fargas. "But it is essential that device installation is as 'plug-and-play' as possible, otherwise the potential cost-savings of LoRaWAN may not be realised."

"This solution achieves complete control of central HVAC plant and integration of distributed room controls without the need for any wiring outside of the plant-room," adds Dr Fargas. "This results in significant installation cost savings while also reducing running costs by allowing more intelligent control of occupied spaces."

Finally, it is not necessary to choose either a backhaul or complementary network option, as a LoRaWAN device network can function entirely separately from a legacy BMS, with the only integration taking place at the analytics layer where data is collected from any number of sources.

The LoRaWAN implementation route will depend on many factors. Users will need to ask what specific capabilities does the organization want to add to its legacy system? They may need to determine whether the priority is to add new layers of data and control ability to all facilities, or to bring a new remote facility within the system. What is the need for scalability? What is the sensitivity to cyber risk?

But there are advantages that are common to all LoRaWAN implementations. The technology is as reliable as alternative communications standards such as cellular systems, but with a much lower cost of ownership and lower cost per device. Users can also choose to subscribe to a LoRaWAN service (such as a cellular model), or build a completely private network for their own use (such as a WiFi model). There already exists a rich ecosystem of providers, devices and end-to-end solutions, all offering a fast-track to more intelligent buildings management and better employee health and productivity.

After all, the built environment is the human environment. Houses, offices, factories, hospitals, libraries, museums– these are the places that frame people's lives. The way the built environment is managed determines the quality of lives and the quality of work. Maximising that quality is the purpose for which LoRaWAN was built.

Case Study: Talkpool

HOW TALKPOOL LEVERAGES LoRaWAN FOR SUSTAINABILITY

Talkpool offers security solutions for smart buildings, and provides Heating, Ventilation and Air Conditioning (HVAC) systems that are now optimized through LoRaWAN.

"In most countries, buildings account for 20-40% of the total energy consumption," says Stefan Lindgren, Chief Technology Officer at Talkpool. "Around a third of that energy is used by HVAC systems. Optimization of these systems is critical from a sustainability perspective."

Most HVAC systems today run on default or manually controlled settings which do not respond to changing conditions. Yet connected systems can take into account real-time indoor air quality data, daily energy price fluctuations, and forecast weather.

"Our solution bridges this gap and transforms old HVAC systems into modern, demand-driven HVAC systems," says Lindgren. "We use data from our LoRaWAN air quality sensors as well as weather and energy forecasts. All these data feed into an artificial intelligence algorithm which models the building and learns how to optimally control the HVAC system. This is then implemented on top of the existing BACnet or building management system."

The result is a significant increase in service quality and reduction in carbon footprint, adds Lindgren. "LoRaWAN is an essential part of our commitment to provide sustainable smart building solutions."